Allied Vision

Goldeye

CL-034 TEC1

- Camera Link InGaAs camera
- VGA resolution
- Compact industrial design
- No fan
- Simple setup by GenCP
- 303 fps

See the invisible

Short-wave infrared (SWIR) cameras with InGaAs sensor technology

Goldeye CL-034 TEC1 with InGaAs FPA 636 × 508 runs 303.0 frames per second at 0.3 MP resolution.

Goldeye cameras are equipped with InGaAs sensor technology making them sensitive in the short wave infrared spectrum ranging from 900 nm to 1,700 nm. Some models have extended sensitivity in the visible spectrum down to 400 nm. All Goldeye SWIR cameras can be operated at very high frame rates and capture outstanding low-noise images. They are the perfect choice for industrial and scientific applications beyond the visible spectrum. All Goldeye models are available with either a Camera Link or a GigE Vision interface.

Easy software integration with Allied Vision's Vimba Suite and compatibility to the most popular third party image-processing libraries.

AcquireControl adds extensive image analysis functions, such as:

- Pseudo color LUT with several color profiles
- Auto contrast
- Auto brightness
- Analyze multiple regions (rectangular, circle) within the image
- Real-time statistics and histogram display

The Modular Concept offers various options for lens mount, housing variants, optical filters, case design, and more. See the Customization and OEM Solutions webpage for additional options.

Allied Vision

Specifications

Interface	Camera Link Base
Resolution	636 (H) × 508 (V)
Spectral range	900 nm to 1700 nm
Sensor	InGaAs FPA 636 × 508
Sensor type	InGaAs
Sensor size	No standard size
Pixel size	15 µm × 15 µm
Lens mounts (available)	C-Mount
Max. frame rate at full resolution	303 fps
ADC	14 Bit
Image buffer (RAM)	256 MByte
Cooling temperature	+20 °C (default and calibrated), +5 °C, +35 °C, +50 °C, or user-configurable
Dark current	49 ke^-/s (at +20 °C FPA temperature)
Temporal dark noise	390 e^- (Gain0), 53 e^- (Gain1), 32 e^- (Gain2)
Saturation capacity	1.2 Me^- (Gain0), 84.8 ke^- (Gain1), 25 ke^- (Gain2)
Dynamic range	69 dB (Gain0), 64 dB (Gain1), 59 dB (Gain2)

Output	
Bit depth	8 - 14 Bit
Monochrome pixel formats	Tap Geometry 1X 1Y: Mono8, Mono12, Mono14; Tap Geometry 1X2 1Y: Mono8, Mono12

General purpose inputs/outputs (GPIOs)	
TTL I/Os	LVTTL I/Os: 1 input, 1 output
Opto-isolated I/Os	1 input, 2 outputs
RS232	115 200 Baud, 8N1 (adjustable)

Operating conditions/dimensions	
Operating temperature	-20 °C to +55 °C (case)
Power requirements (DC)	10.8 V to 30.0 V

Power consumption	11.8 W at 12 VDC
Mass	350 g (with C-Mount adapter)
Body dimensions (L × W × H in mm)	78 × 55 × 55
Regulations	CE: 2014/30/EU (EMC), 2011/65/EU, incl. amendment 2015/863/EU (RoHS); FCC Class B

Quantum efficiency

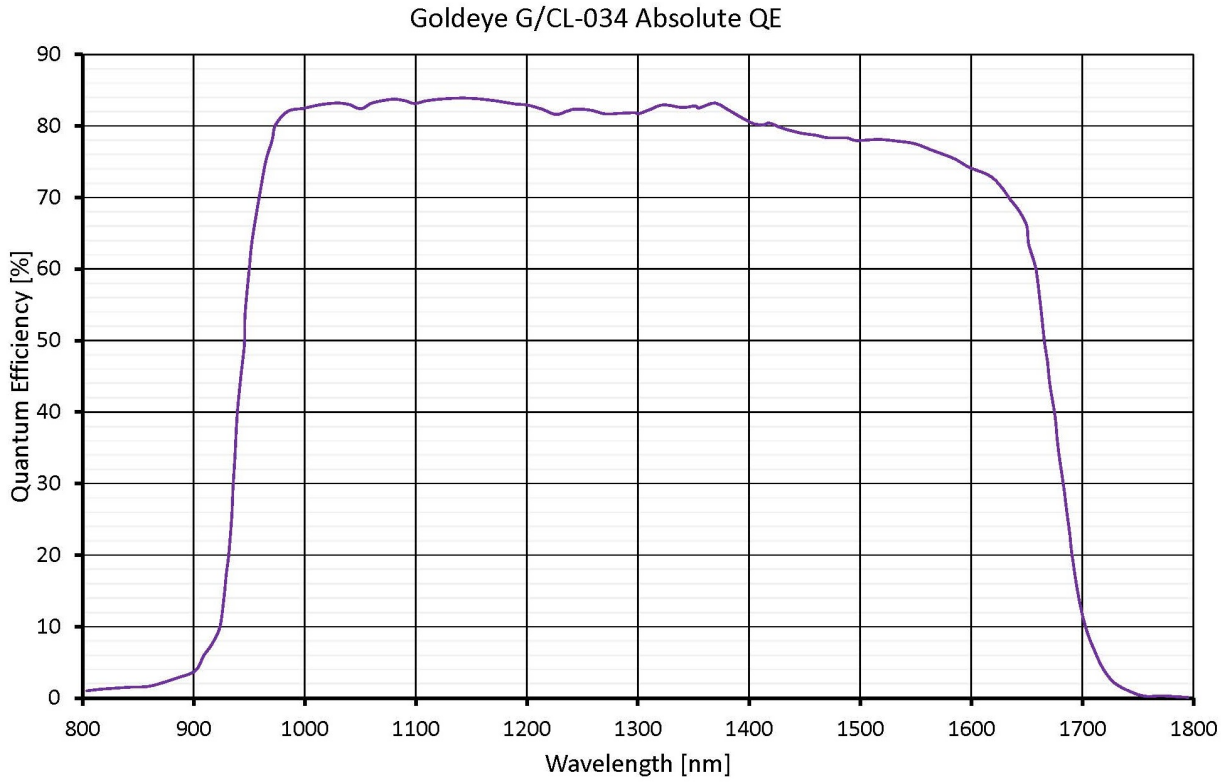

Features

Image control: Auto

- Auto contrast
- Auto exposure

Image control: Other

- Background correction
- Binning
- Decimation
- DPC (defect pixel correction)
- LUT (look up table)
- Multiple ROIs (regions of interest)
- NUC (non-uniformity correction)
- ROI (region of interest)

Camera control

- Acquisition frame rate
- Bandwidth control
- Event channel
- Firmware update in the field
- I/O and trigger control
- Image chunk data
- Stream hold
- User sets

Sensor temperature control

- Temperature management by TEC
- Temperature specific events
- Temperature status indicator

Technical drawing

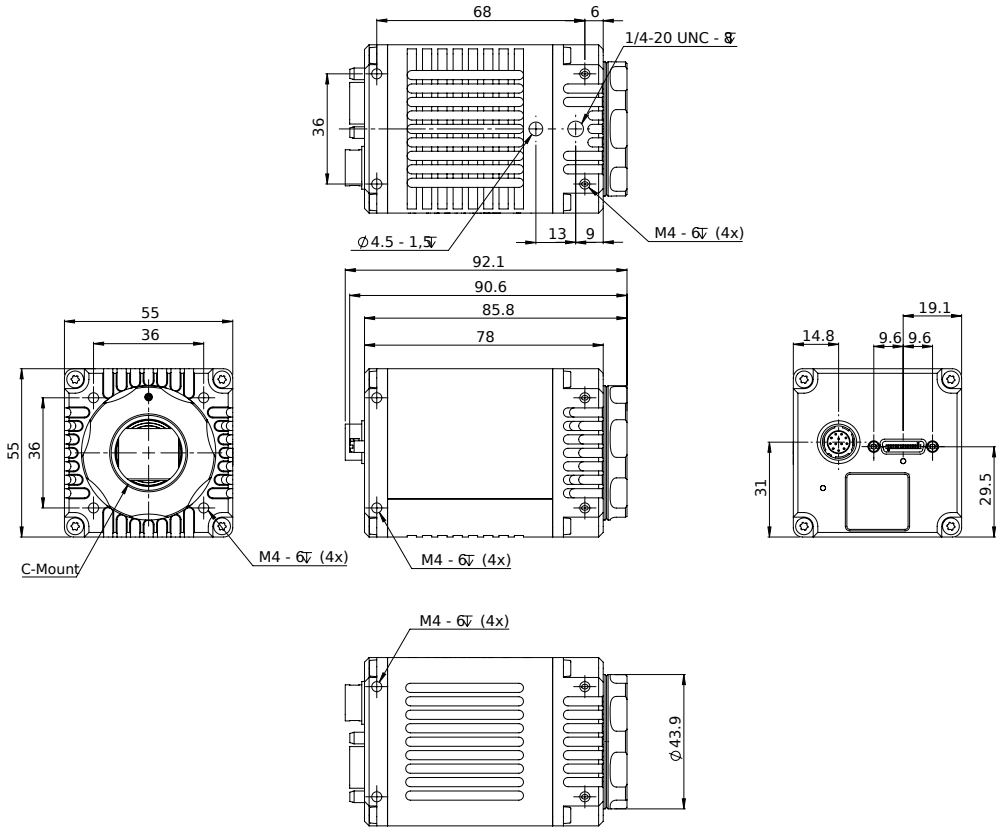

Applications

Goldeye cameras are very sensitive in the SWIR spectrum. They can be used in an extended operating temperature range. Thanks to temperature stabilization and integrated image correction, Goldeye cameras achieve an outstanding image quality with little noise and a high dynamic range. They are well-suited for many typical SWIR applications in various industry branches:

- Semiconductor industry: solar cell and chip inspection
- Recycling industry: plastics sorting
- Medical imaging, sciences: hyper- and multi-spectral imaging, microscopy, optical coherence tomography (OCT)
- Metal and glass industry: thermal imaging of hot objects (250 °C to 800 °C)
- Agriculture industry: airborne remote sensing
- Printing industry: banknote inspection
- Electronics industry: laser beam profiling
- Surveillance and security: vision enhancement (for example, seeing through fog)

White Paper To learn more about typical application fields for SWIR cameras, download our White

Paper: Seeing beyond the visible – short-wave infrared (SWIR) cameras offer new application fields in machine vision