Allied Vision

Mako G

G-319

- Power over Ethernet
- IEEE 1588 PTP
- Trigger over Ethernet
- Ultra-compact design

GigE Vision camera featuring the Sony IMX265 CMOS sensor

Mako G-319 is a 3.2 megapixel GigE machine vision camera that incorporates the high quality Type 1/1.8 (8.9 mm diagonal) Sony IMX265 CMOS sensor with Pregius global shutter. At full resolution, this camera runs 37.6 frames per second. With a smaller region of interest, higher frame rates are possible. The Mako G-319 is an ideal replacement for legacy CCD models. Mako cameras have an ultra-compact form factor and the same mounting positions as many analog cameras. All models include Power over Ethernet, three opto-isolated outputs, and a 64 MB image buffer. The image quality profits from the precisely aligned sensor. By default monochrome models ship with no optical filter and color models ship with a Type Hoya C-5000 IR cut filter.

Benefits and features:

- Monochrome (G-319B) and color (G-319C) models
- GigE Vision interface with Power over Ethernet
- Screw mount RJ45 Ethernet connector for secure operation in industrial environments
- IEEE 1588 Precision Time Protocol allows for easy synchronization of multiple cameras and devices on network
- Trigger over Ethernet Action Commands allow for a single cable solution to reduce system costs
- Supports cable lengths up to 100 meters (CAT-6 recommended)
- Comprehensive I/O functionality for simplified system integration
- Popular C-Mount lens mount
- Easy camera mounting via standard M3 threads on top and bottom of housing or optional tripod adapter
- Easy software integration with Allied Vision's Vimba Suite and compatibility to the most popular third party image-processing libraries.
- Select between B 270 ASG protection glass and filter types: Jenofilt 217 IR cut filter, Hoya C-5000 IR cut filter, RG715 IR pass filter, or RG830 IR pass filter

See the Modular Concept for lens mount and optical filter options.
See the Customization and OEM Solutions webpage for additional options.

Specifications

Mako G	G-319
Interface	IEEE 802.3 1000BASE-T, IEEE 802.3af (PoE)
Resolution	2064 (H) × 1544 (V)
Spectral range	300 to 1100 nm
Sensor	Sony IMX265
Sensor type	CMOS
Shutter mode	Global shutter
Sensor size	Type 1/1.8
Pixel size	3.45 µm × 3.45 µm
Lens mounts (available)	C-Mount, CS-Mount, S-Mount
Max. frame rate at full resolution	37.6 fps
ADC	12 Bit
Image buffer (RAM)	64
Imaging performance	

Imaging performance data is based on the evaluation methods in the EMVA 1288 Release 3.1 standard for characterization of image sensors and cameras. Measurements are typical values for monochrome models measured at full resolution without optical filter. Contact Sales or AE for more information.

Quantum efficiency at 529 nm	63 %
Temporal dark noise	1.8 e^-
Saturation capacity	10600 e^-
Dynamic range	72.7 dB
Absolute sensitivity threshold	2.5 e^-
Output	
Bit depth	8/12 Bit
Monochrome pixel formats	Mono8, Mono12, Mono12Packed
YUV color pixel formats	YUV411Packed, YUV422Packed, YUV444Packed
RGB color pixel formats	RGB8Packed, BGR8Packed
Raw pixel formats	BayerRG8, BayerRG12, BayerRG12Packed
General purpose inputs/outputs (GPIOs)	
Opto-isolated I/Os	1 input, 3 outputs
Operating conditions/dimensions	
Operating temperature	+5 °C to +45 °C housing temperature
Power requirements (DC)	12 to 24 VDC AUX or 802.3at Type 1 PoE
Power consumption	2.3 W at 12 VDC; 2.6 W PoE

Mako G	G-319
Mass	80 g (with C-Mount)
Body dimensions (L × W × H in mm)	60.5 × 29.2 × 29.2 (including connectors)
Regulations	CE: 2014/30/EU (EMC), 2011/65/EU, including amendment 2015/863/EU (RoHS); FCC Class B; CAN ICES-003

Quantum efficiency

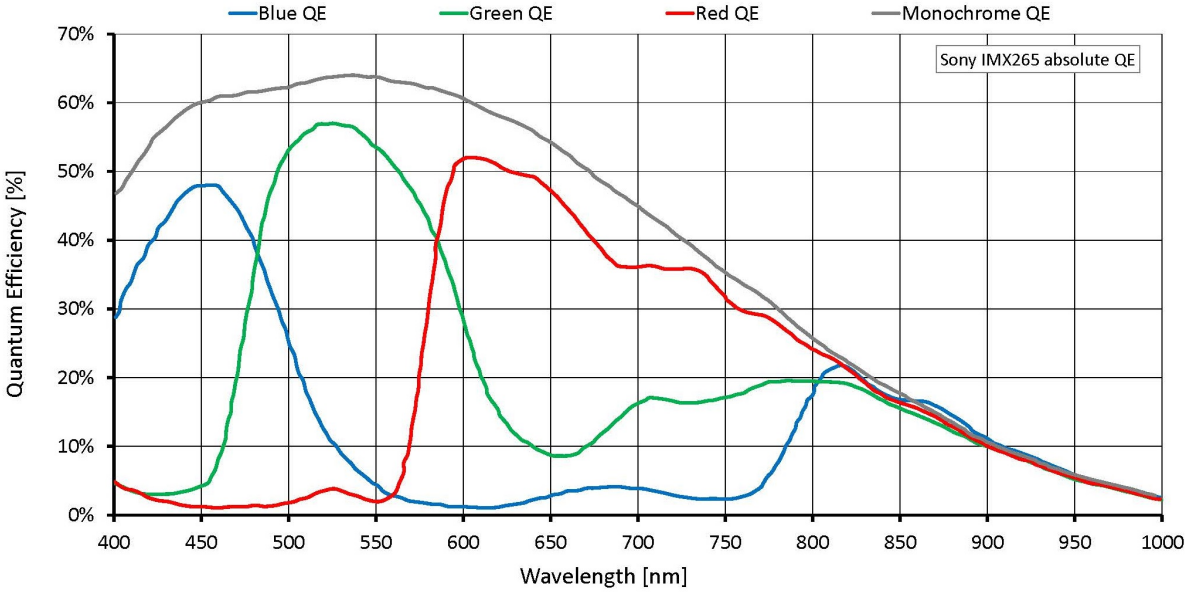

Features

Image optimization features:

- Auto gain (manual gain control: 0 to 40 dB; 0.1 dB increments)
- Auto exposure (exposure time control varies by pixel format)
- Auto white balance (G-319C only)
- Binning
- Color correction, hue, saturation (G-319C only)
- Decimation
- Gamma correction
- One look-up table
- Region of interest, separate region for auto features

Allied Vision

Camera control features:

- Event channel
- Image chunk data
- IEEE 1588 Precision Time Protocol
- Global shutter mode
- Storable user sets
- StreamBytesPerSecond (bandwidth control)
- Stream hold
- Sync out modes: Trigger ready, input, exposing, readout, imaging, strobe, GPO
- Temperature monitoring (main board only)
- Trigger over Ethernet Action Commands

Allied Vision

Technical drawing

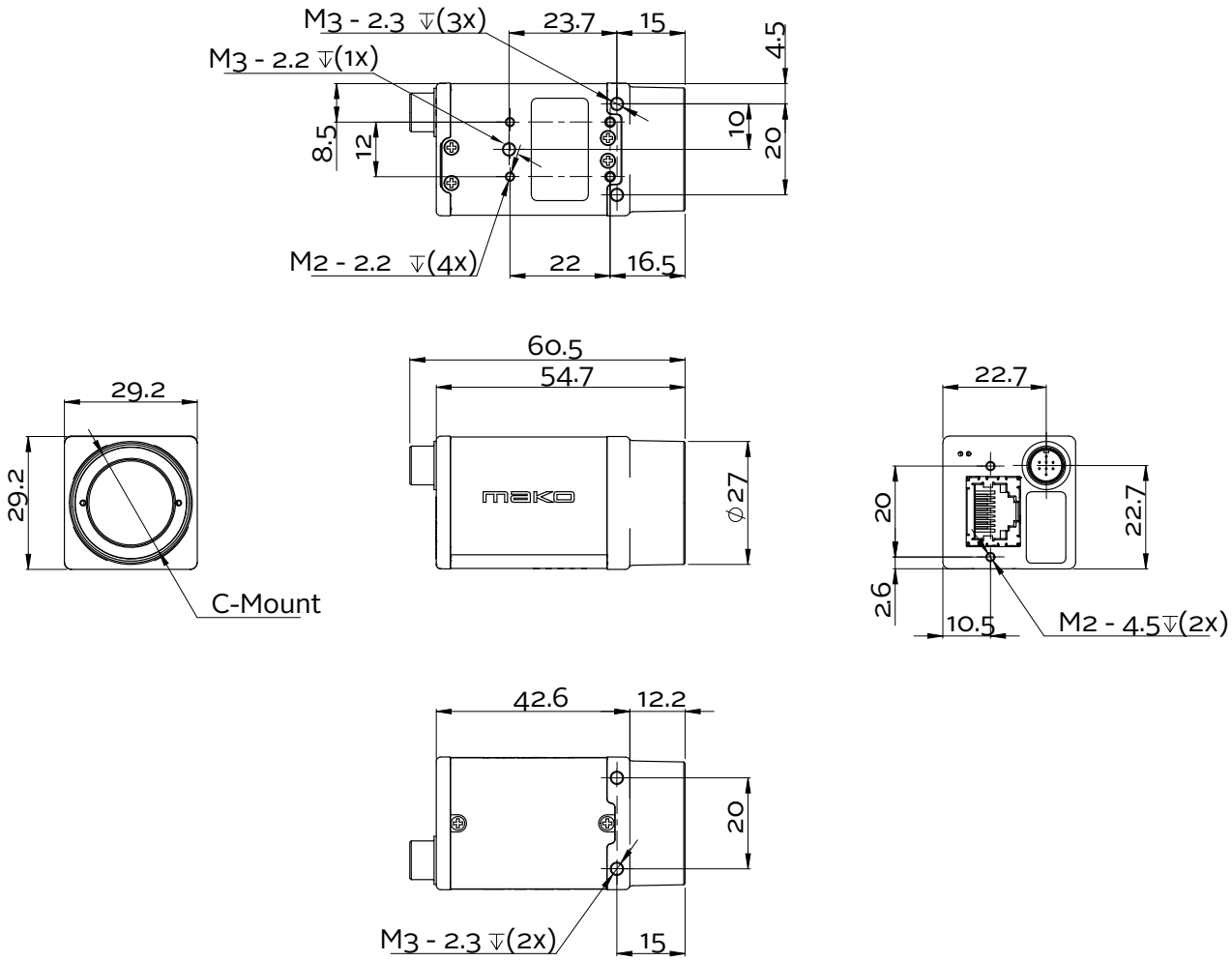

Applications

Mako G-319 is suitable for a wide rannge of applications including:

- Robotics
- Quality control
- Inspection, surveillance
- Industrial imaging
- Machine vision
- Logistics